Zambelis LIGHTS

MAGNETIC SURFACE CURVE TRACK 90° 25433

Please read instructions before commencing installation and retain for future reference.

INSTALLATION INSTRUCTIONS

Electrical products can cause death, injury, or property damage.
Maintenance and installation should only be carried out
by a professional electrician.

- Ensure the main supply is switched off.
- Follow the instructions step by step.
- Making sure all connections are tight.
- Reconnect power.

WARNING

Make sure that the products are installed properly before connecting to electricity.
Do not cover the luminaire.
Do not exceed the maximum wattage rating of the lamp.
If the light source is contained in this luminaire (integrated LED),
it shall only be replaced by the manufacturer,
his service agent, or a similarly qualified person.

Dimensions: Ø: 900mm L: 992mm H: 15mm
Material: Aluminium

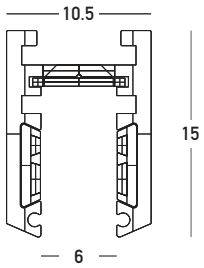

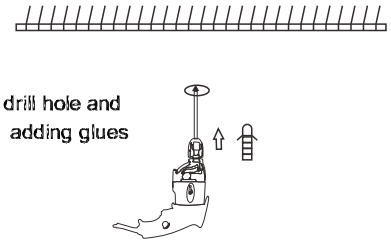

Preparation and Installation for Curved Magnetic Rail System.

- Drill holes in the ceiling or on the wall as required.
- Secure the curved magnetic tracks to the surface using screws.
- Attach a feeder to the first magnetic track in your system and connect it to a 24V DC driver to supply power from the central power source.
- Use corners, mechanical connectors, and additional feeders where necessary, according to your structural preferences.
- Finally, install the flexible LED rubber strip **(code 25246)** meet your needs by pushing the adapter into a linear track.

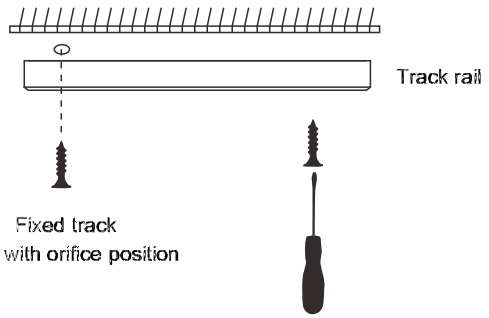

To join and stabilize curves with straight lines or curves with other curves using a mechanical connector, follow these steps:

- Using the appropriate straight mechanical connector **(code 25261).**
- Align the curves and/or straight lines precisely at the connection points where they will be joined.
- Position the straight mechanical connector so that it securely spans the junction between the two elements, ensuring it provides adequate support to maintain stability.
- Fasten the connector.
- Check the connection for firmness and adjust if necessary to ensure the curves and lines remain stable and properly joined.

Power Supply and Power Transfer on Curved Magnetic Rail System.

- Choose the right power supply driver for your system (On-Off, Dali, Push Button, Bluetooth).
- Connect the driver to the main power cable.
- Install a feeder **(code 25264)** at the start of the rail system to supply power.
- Use flexible connectors to join power between rails, flex connector **(code 25263)** for curves and straight connector **(code 25262)** for straight sections.
- For large systems, add more power drivers and more feeders to keep the power going.

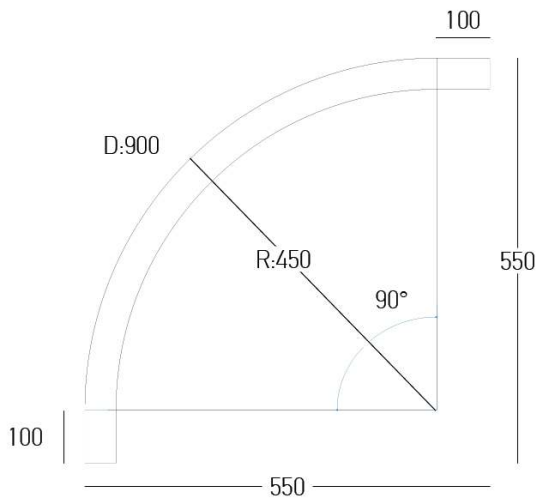

SYSTEM REFERENCE

- **Track Form:** Linear | Curved
- **Installation:** Surface
- **Material:** Aluminium
- **System Type:** 24V Magnetic Track System 6mm

LED IP 20 CRI 90

13032026