Zambelis LIGHTS

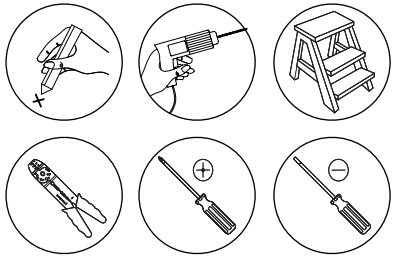

CEILING LIGHT Z12107K-B

Please read instructions before commencing installation and retain for future reference.

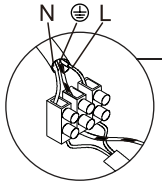

Connecting the Terminal Block

Connect main supply (**brown - L**ive, **blue - N**eutral) into terminal block making sure all connections are tight.

3

SPECIFICATIONS

- **Material:** Aluminium
- **Lamp type:** LED 7W 3000K
- **Ingress Protection:** IP20. Protection against entry of solid objects greater than 12mm in diameter.

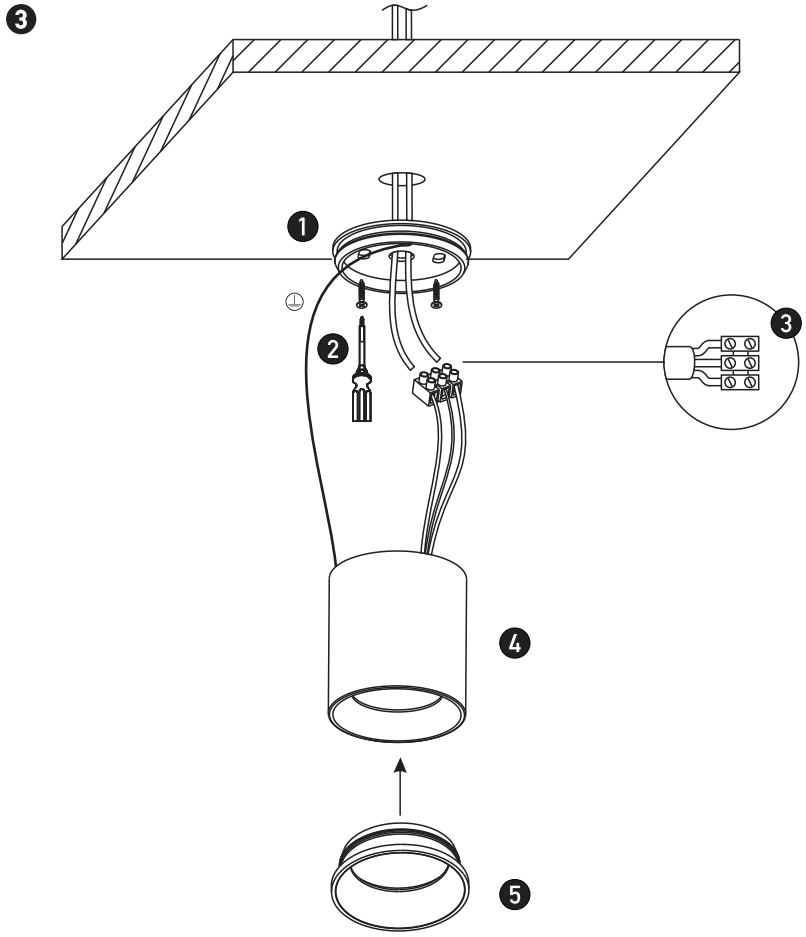

Ring must be ordered separately.

INSTALLATION INSTRUCTIONS

⚠ Electrical products can cause death, injury, or damage to property. Maintenance and installation should only be carried out by a professional electrician.

- Ensure main supply is switched off.
- Insert masonry plugs (1) into the mounting surface.
- Fit mounting bracket onto the mounting surface with self-tapping screws (2).
- Connect main supply wires to terminal block (3) making sure all connections are tight.
- Twist the cylinder light to lock it onto the mounting bracket (4).
- Twist the ring to lock it onto the cylinder light (5).
- Reconnect power.

WARNING

- Make sure that the products is installed properly before connecting to electricity.
- Do not cover the fitting.
- Not for outdoor use or in wet conditions.

TRIAC DIMMABLE | LED | CRI 80 | IP 20 | 0,5m

29|09|2021