Zambelis LIGHTS

INSTRUCTION SHEET OF 2083
TRIMLESS RECESSED MAGNETIC DEEP TRACK

48 VOLT MAGNETIC SYSTEM

Please read instructions before commencing installation and retain for future reference.

INSTALLATION INSTRUCTIONS

⚠ Electrical products can cause death, injury, or damage to property. Maintenance and installation should only be carried out by a professional electrician.

- Make sure the power stay on power OFF position before safe operation.
- Check the lighting fixture and accessories before installation.
- If there is any damage in lamp body or glass, please stop the installation.
- Make sure that the products is installed properly before connecting to electricity.
- Do not cover the fitting.
- Not for outdoor use or in wet conditions.

Cutting Hole 28mm

Dimensions Indicated in Millimeters.

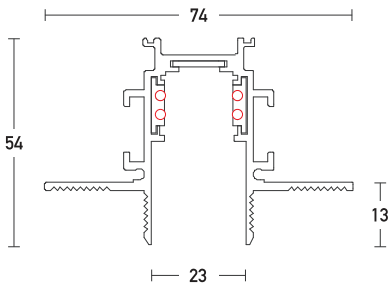

step 1.: Pass the profile through the hole as drawing below.

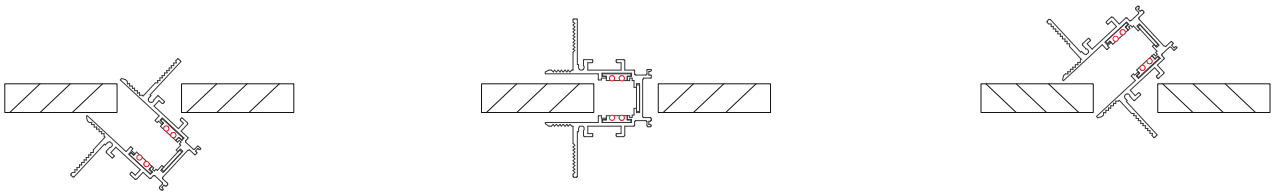

step 2.: Screw from downside with self tapping screws. Important to keep the distance between the profile stable.

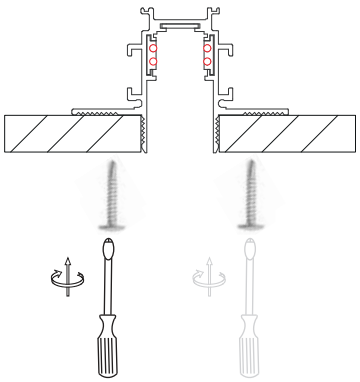

step 3.: Put the end caps to the profile.

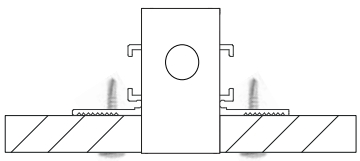

Plastic End Caps.:
Color Black / **Code 2099-B**
Color White / **Code 2099-W**

step 4.: Plaster the edge of false ceiling.

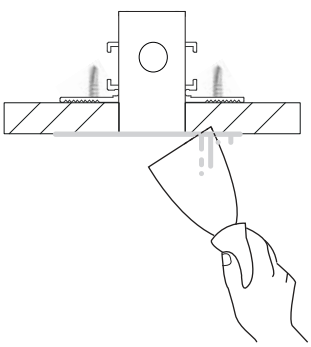

step 5.: Connect the feeder and insert the magnetic luminaire.

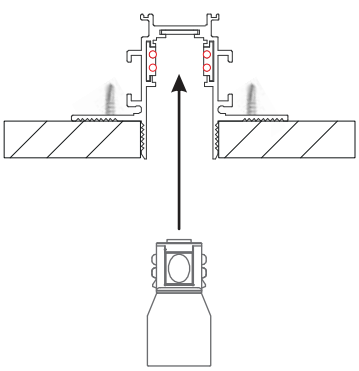

02I11I2021