Zambelis LIGHTS

Product Data Sheet

Code 2587

Color: Sandy Black

Date: 31/10/2025

Zambelis Lights

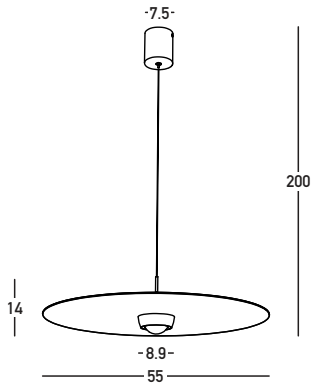

Physical Specifications

Luminaire Type	Indoor Single Pendant Lights
Color	Sandy Black
Material	Metal - Aluminum - Glass
IP	20
Warranty	3 Years

Dimensions Reference

Overall Dimensions	Ø: 55cm H: 14cm
Base	Ø: 7.5cm H: 9cm
Cable & Wires	200cm Cable Adjustable
Cutting Hole	None
Depth Required	None

Illumination Data

Color Temperature	3000K
Cri	90
Lumen Output	1300Lm
Beam Angle	360° in a sphere
UGR	N/A
Energy Efficiency Class	E
Indicative Lifetime	L70B50 30000h
Mc Adam	SDCM<5

Electrical Specifications

Input Voltage	220-240V
Operating Frequency	50/60Hz
Power	21W
Supply Current	500mA
Voltage Compatibility	30-42VDC
Light Source	LED built in
Dimming Options	Triac
Safety Class	I

Packing Info

Package Size	L: 63cm W: 63cm H: 15cm
Gross Weight	3.32kg

Product Description

Pendant LED Light 21W 3000K
Triac Sandy Black

LED IP20 30K HOURS CRi90 DIMMABLE

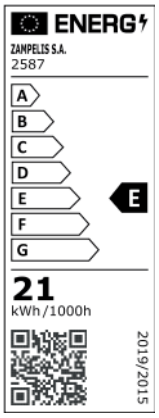

www.zambelislights.gr | info@zambelislights.gr

5 212031 015488

3 YEARS WARRANTY

Greece , Attica , Keratea , Kivouri | Postal Code: 19001 | P.O. Box: 4791
Tel.: (+30) 22990 63518-19 | Fax: (+30) 22990 63521

ANDROID APP ON Google play | Available on the iPhone App Store